MODEL	CHRYSLER NUMBER	KVA @ 50% DC	PRIMARY VOLT/FREQ	SECONDARY VOLTAGE (DC) LO-TAP - HI-TAP	TURNS RATIO LO-TAP	TURNS RATIO HI-TAP	Dim. 'A'	Dim. 'B'	WEIGHT LBS
TDC-5826	- - -	160	500/1000Hz	9.0 - 13.1	55:1	38:1	425	279	70
TDC-5998	91-680-1002	160	650/1000Hz	9.0 - 13.0	72:1	50:1	425	279	70
TDC-5999	- - -	160	800/1000Hz	9.0 - 13.1	88:1	61:1	425	279	70

COOLING REQUIREMENTS: 7.5LPM @ 30°C

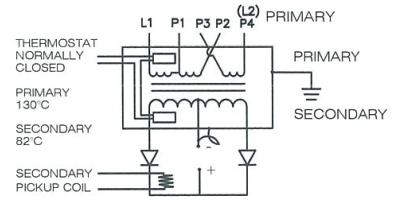

TRANSFORMER CASE MUST BE GROUNDED. TRANSFORMER WILL BE SHIPPED WITH A JUMPER CONNECTING SECONDARY CENTER TAP TO CASE. USER MUST PROVIDE APPROPRIATE GROUNDING OF SECONDARY CIRCUIT. FOR APPLICATIONS ABOVE A 20% DUTY CYCLE, CONTACT ROMAN MANUFACTURING FOR ASSISTANCE.

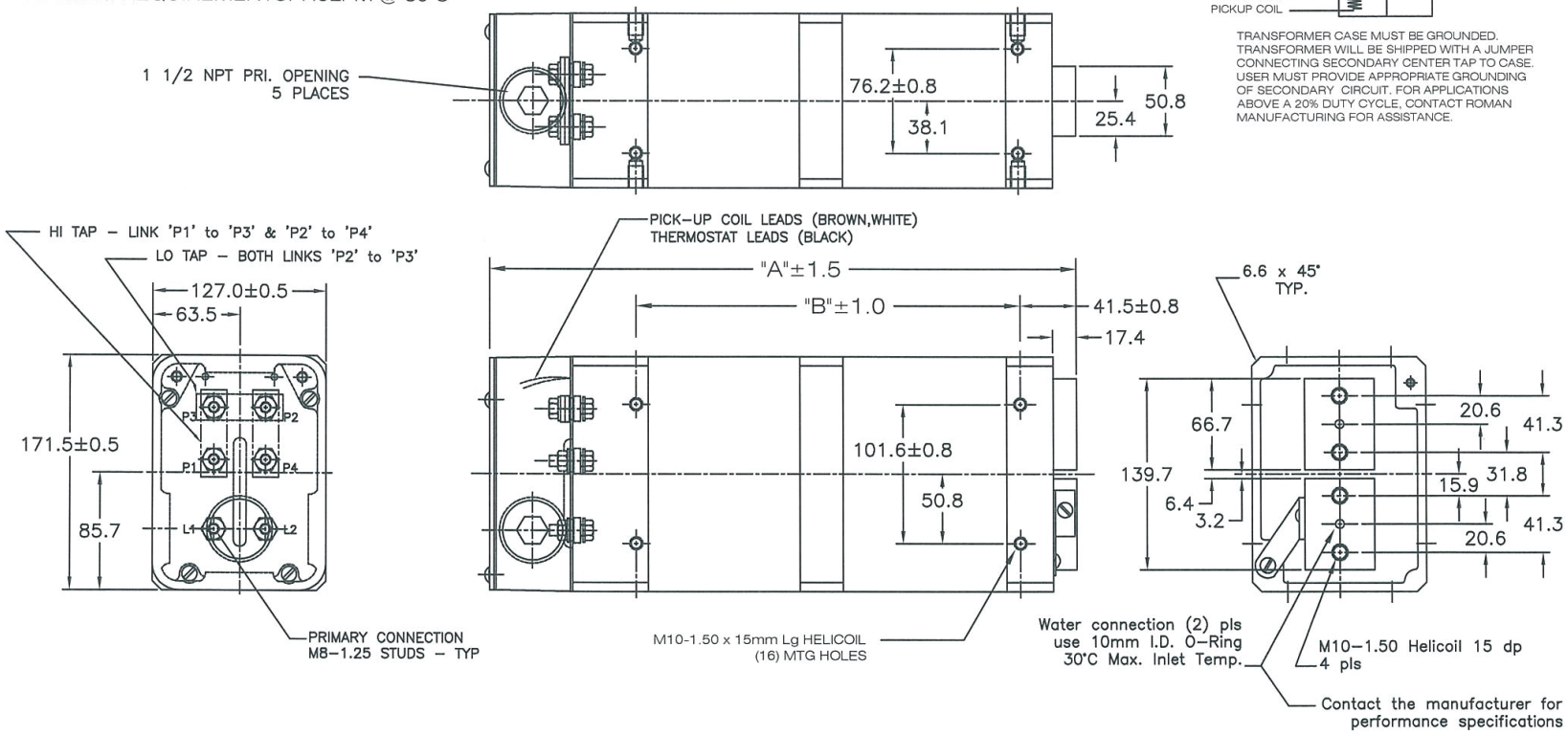

NOTE*
The secondary terminals of this device are intended as an electrical connection only. Applications must be designed to minimize any forces applied to the secondary terminals, this can be accomplished by transferring forces to a structural member.

All dimensions in Millimeters

REV	DESCRIPTION		DATE
B	ADDED 500 VOLT VERSION TO CHART TDC–5826	GMA / KLY	07Feb13
A	ADDED CHRYSLER NUMBER TO CHART	GMA / KLY	12Nov10

THIS DRAWING AND ALL THE INFORMATION AND TECHNOLOGY IN IT ARE EXCLUSIVE, CONFIDENTIAL AND PROPRIETARY TO RoMan MFG. INC. THIS DRAWING IS OWNED BY RoMan MFG. INC. AND UNLESS SPECIFICALLY AUTHORIZED IN WRITING, NO COPIES SHALL BE MADE OF THIS DRAWING, AND SHALL BE USED ONLY FOR THE LIMITED PURPOSE FOR WHICH IT IS DISCLOSED AND ONLY TO THE BENEFIT OF RoMan MFG. INC., AND IT AND ANY COPIES, AUTHORIZED OR NOT, SHALL BE IMMEDIATELY RETURNED UPON ANY REQUEST THEREFORE.

SCALE: NONE | DATE: 31MAY07 | RoMan | DRAWN BY: BCC | WEIGHT:

POWER SUPPLY

SIZE "3" | DRAWING NUMBER: 5998–1