WSI WELD SYSTEMS INTEGRATORS, INC.

RESISTANCE WELDING. SOLVED.

Pacific (Smith Brothers) Resistance Welding Products

FOR SALE and IN-STOCK at Weld Systems Integrators

Pacific

TYPICAL PHYSICAL AND MECHANICAL PROPERTIES OF PACIFIC ALLOYS

ALLOY	R.W.M.A. GROUP A	AVERAGE PROPERTIES ON	HARDNESS ROCKWELL	ELECTRICAL CONDUCTIVITY % I.A.C.S.	ULTIMATE STRENGTH PSI	ELONGATION % IN 2"	ANNEALING TEMP. °F.
RWMA CLASS 1 A high conductivity alloy recommended for spot welding aluminum, aluminum alloys, magnesium alloys, brass, bronze and coated materials such as tin plate, terne plate and cadium plate.	CLASS 1	COLD DRAWN BARS UP TO 1" DIA.	65 B — 75 B	85	65,000	20	660
RWMA CLASS 2 – CHROMIUM COPPER High conductivity, high strength alloy recommended for spot welding clean mild steel, low alloy steels, stainless steels, nickel, silver, nickel alloys, low conductivity brasses and bronzes.	CLASS 2	H.T. AND COLD DRAWN BARS UP TO 1" DIA.	75 B — 85 B	84	75,000	15	930
RWMA CLASS 3 Used for spot welding metals of high electrical resistance such as stainless steel, nichrome, monel, etc.	CLASS 3	H.T. AND COLD DRAWN BARS UP TO 1" DIA.	90 B — 110 B	50	110,000	10	1,020

RECOMMENDED ELECTRODE MATERIALS FOR SPOT WELDING

WELDABILITY INDICATED APPLICABLE WHEN CONVENTIONAL SPOT WELDING METHODS USED TO JOIN SIMILAR THICKNESS OR MATERIAL

	TUNGSTON MOLYBDENUM	MAGNESIUM ALLOYS	NICKEL	NICKEL ALLOYS	STAINLESS STEEL	CHROME PLATE	CADMIUM PLATE	GALV. IRON ZINC PLATE	TERNE PLATE	TIN PLATE	H.R. STEEL-SCALY	C.R. STEEL H.R. STEEL	PHOSPHOR BRONZE	SILICON BRONZE	NICKEL-SILVER	CUPRO-NICKEL	YELLOW BRASS	RED BRASS	ALUMINUM AND DURALUMIN
ALUMINUM AND DURALUMIN		A 1 1 1	C 2 1 5_6	C 2 1 1_6	C 1 1 5_6	C 2 1 3_5	C 1 1 5	B 1 1 5	B 1 1 5	B 1 1 5		C 2 1 5	B 2 1 1_6	B 2 1 1_6			B 2 1 1	C 2 1 6	A 1 1
RED BRASS		C 1 2 1	B 2 5 2	B 2 5 2	C 2 5	C 2 5	C $1_{②}$ 5	C $1_{②}$ 5 2	C 1 5 2	C 1 5 2		C 2 2 5	B 2 5 2	B 2 5 2	B 2 5 2	B 2 5	B 2 2	C 2 2 1_2	
YELLOW BRASS		C 1 2 1	B 2 2 2	B 2 4 2	C 2 4	C 2 4	C $1_{②}$ 4 2	C 1 4 2	C $1_{②}$ 4 2	C 1 4 2		C 2 4 5	A 2 4	A 2 4	A 2 4	A 2 4	A 2 2		
CUPRO-NICKEL		B 1 2 2_5	B 4 2	B 2 2	C $2_{①}$ 2 6	C 2 2 $3_{⑥}$	C $1_{②}$ 2 6	C 1 2 6	C $1_{②}$ 2 6	C 1 2 6	C $1_{②}$ 2 4	C 2 2 5	B 2 2	B 2 2	B 2 2	A 2 2			
NICKEL-SILVER		B 1 2 1_6	B 4 2	B 2 2	C $2_{①}$ 2 6	C 2 2 $3_{⑥}$	C $1_{②}$ 2 6	C 1 2 6	C $1_{②}$ 2 6	C 1 2 6	C $1_{②}$ 2 4	C 2 2 5	B 2 2 5	B 2 2	A 2 2				
SILICON BRONZE		B 1 2 1_6	B 2 2	B 2 2	C $2_{①}$ 2	C 2 2 5	C $1_{②}$ 2	C 1 2	C $1_{②}$ 2	C 1 2	C $1_{②}$ 2 4	B 2 2 5	B 2 2	A 2 2					
PHOSPHOR BRONZE		C 1 2 1	B 2 2	B 2 2	C 2 2	C 2 2 3	C $1_{②}$ 2	C $1_{②}$ 2	C $1_{②}$ 2	C 1 2	C $1_{②}$ 2 4	B 2 2	A 2 2						
C.R. STEEL H.R. STEEL-CLEAN	B 2 2 5		B 2 2 5	B 2 2 5	A 2 3	A 2 2 3	A 2 2	A 1 2	A $1_{②}$ 2 2	A 1 2	C $1_{②}$ 2 4	A 2 2							
H.R. STEEL-SCALY	C 2 $1_{②}$ 4_5				B $2_{①}$ $1_{②}$ 4	B 2 $1_{②}$ 3_4	B 2 $1_{②}$ 4	B 1 $1_{②}$ 2_4	B $1_{②}$ $1_{②}$ 2_4	B 1 $1_{②}$ 2_4	C $1_{②}$ $1_{②}$ 4								
TIN PLATE	C 2 1	C 1 1 1	B 2 1	B 1 1 5	B $2_{①}$ 1	B 2 1 3	B $1_{②}$ 1	A 1 1	B $1_{②}$ 1 2	B 1 1 2									
TERNE PLATE	C 2 $1_{②}$	C 1 1 1	B 2 1	B 1 1 5	B 2 1	B 2 1 3	B $1_{②}$ 1	B 1 1 2	B 1 1 2										
GALV. STEEL ZINC PLATE	C 2 1	C 1 $1_{②}$ 1	B 2 2	B 2 $1_{②}$ 5	B 2 1	B 2 1 3	B 2 1	B $1_{②}$ $1_{②}$											
CADMIUM PLATE	C 2 1	C 1 1 1	B 2 1	B 1 1 5	B 2 1	B 2 1 3	B 1 1												
CHROME PLATE	B 2 2 3		B 2 2 3	B 2 2 3	A $3_{②}$ 2 3	A 2 2 3													
STAINLESS STEEL	B 2 1 1_6		B 3 $2_{①}$	B 2 2	A $3_{②}$ $3_{②}$														
NICKEL ALLOYS	B 2 2 1_6		A 2 2	A 2 2															
NICKEL	B 2 2 1_6		A 2 2																
MAGNESIUM ALLOYS		B 1 1 1																	
TUNGSTEN MOLYBDENUM	B 2 2 1_6																		

SPECIAL INFORMATION

1 – ACCURATE WELDING CONTROL IMPORTANT

2 – KEEP ELECTRODES CLEAN

3 – USE OF ONE FLAT TIP RECOMMENDED

4 – CLEAN METAL BEFORE WELDING

5 – WELD STRENGTH QUESTIONABLE

6 – SATISFACTORY WELD MAY REQUIRE SPECIAL CONDITIONS

ELECTRODES

1 – CLASS 1
2 – CLASS 2
3 – CLASS 3
4 – CLASS 11
5 – CLASS 14

CIRCLED ELECTRODE MATERIALS ARE SECOND CHOICE

WELDABILITY

A – GOOD
B – FAIR
C – POOR

BLOCK INTERPRETATION

WELDABILITY	ELECTRODE AGAINST ▲
◄ ELECTRODE AGAINST	ELECTRODE AGAINST

WSI WELD SYSTEMS INTEGRATORS, INC.

844-WSI-WELD [974-9353]
www.WSIWeld.com · sales@wsiweld.com

PACIFIC

STANDARD TAPER DIMENSIONS

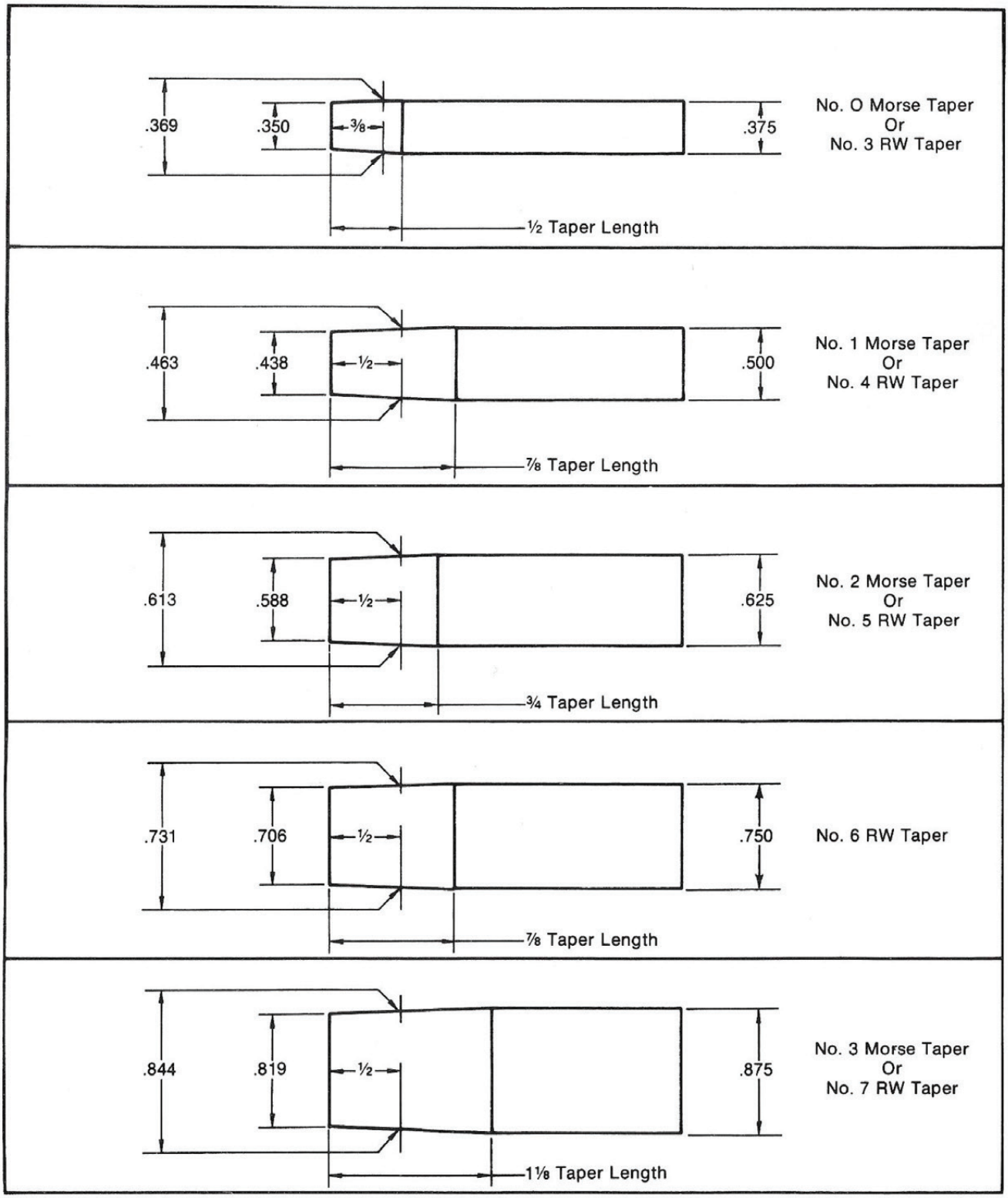

WSI WELD SYSTEMS INTEGRATORS, INC.

844-WSI-WELD [974-9353]
www.WSIWeld.com · sales@wsiweld.com

PACIFIC

GOOD WELDING PRACTICES

1. Your machine should have sufficient electrical and mechanical capacity for the job you intend to do.

2. Consider the advantages of using "Pacific" shanks and inserts instead of a solid electrode. When the face is worn beyond use only the insert is discarded, resulting in considerable savings.

3. Choose the proper insert alloy for the job. Refer to your RWMA Manual and the recommendations on page 3 of this catalog.

4. Choose inserts with the recommended diameter and face for the thickness of the stock being welded. Refer to your RWMA Manual.

5. Always use standard shanks and inserts when possible to avoid excessive costs.

6. For proper cooling you will need at least 30 pounds of line pressure supplying cool water at a minimum flow of 1½ gallons per minute.

7. Connect hoses properly so that water flows through the center tube first.

8. Avoid and prevent leaky and clogged water connections.

9. The internal water cooling tube should be adjusted to within ¼ inch of the bottom of the electrode hole.

10. Keep adjustable water tubes free of deposits by applying a few drops of oil.

11. Keep mating surfaces of holder, shank and insert smooth and free of deposits.

12. To insure conductivity, periodically clean all bores and shafts that are clamped and are to have current flow through them.

13. A thin coating of graphite grease on the shank taper and insert skirt will make removal and replacement easier.

14. Use a suitable hammer that will not damage the holder, shank or insert when aligning or assembling.

15. Use "Pacific" toggle pliers for quick removal of inserts with minimum damage to shanks.

PACIFIC | STRAIGHT SHANKS

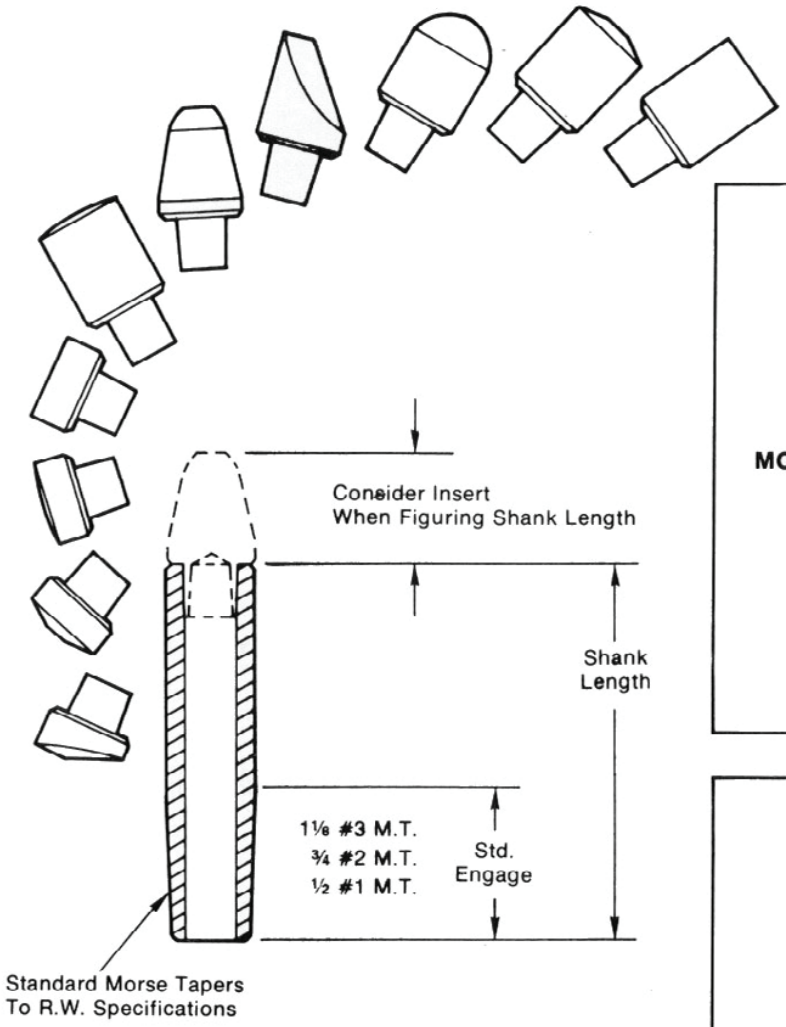

ALL SHANKS ARE MADE FROM
R.W.M.A. CLASS II ALLOY

	PART No.	SHANK LENGTH
No. 1 MORSE TAPER SHANKS	3105 3107 3111 3113	5/8 7/8 1 1/8 1 3/8
	3115 3117 3121 3123	1 5/8 1 7/8 2 1/8 2 3/8
	3125 3127 3131 3133	2 5/8 2 7/8 3 1/8 3 3/8
	3135 3137 3141 3143	3 5/8 3 7/8 4 1/8 4 3/8
No. 2 MORSE TAPER SHANKS	3206 3207 3211 3213	3/4 7/8 1 1/8 1 3/8
	3215 3217 3221 3223	5/8 1 7/8 2 1/8 2 3/8
	3225 3227 3231 3233	2 5/8 2 7/8 3 1/8 3 3/8
	3235 3237 3241 3243	3 5/8 3 7/8 4 1/8 4 3/8
No. 3 MORSE TAPER SHANKS	3314 3320 3324	1 1/2 2 2 1/2
	3330 3334 3340	3 3 1/2 4

CODE

3231

3 – SHANK STYLE
2 – MORSE TAPER
3 – LENGTH IN INCHES
1 – AND EIGHTHS OF AN INCH

WSI WELD SYSTEMS INTEGRATORS, INC.

844-WSI-WELD [974-9353]
www.WSIWeld.com · sales@wsiweld.com

PACIFIC

DOUBLE BEND SHANKS

No. 1 MORSE TAPER-USE SERIES "1" INSERTS - PAGE 11

No. 2 MORSE TAPER-USE SERIES "2" INSERTS - PAGE 12

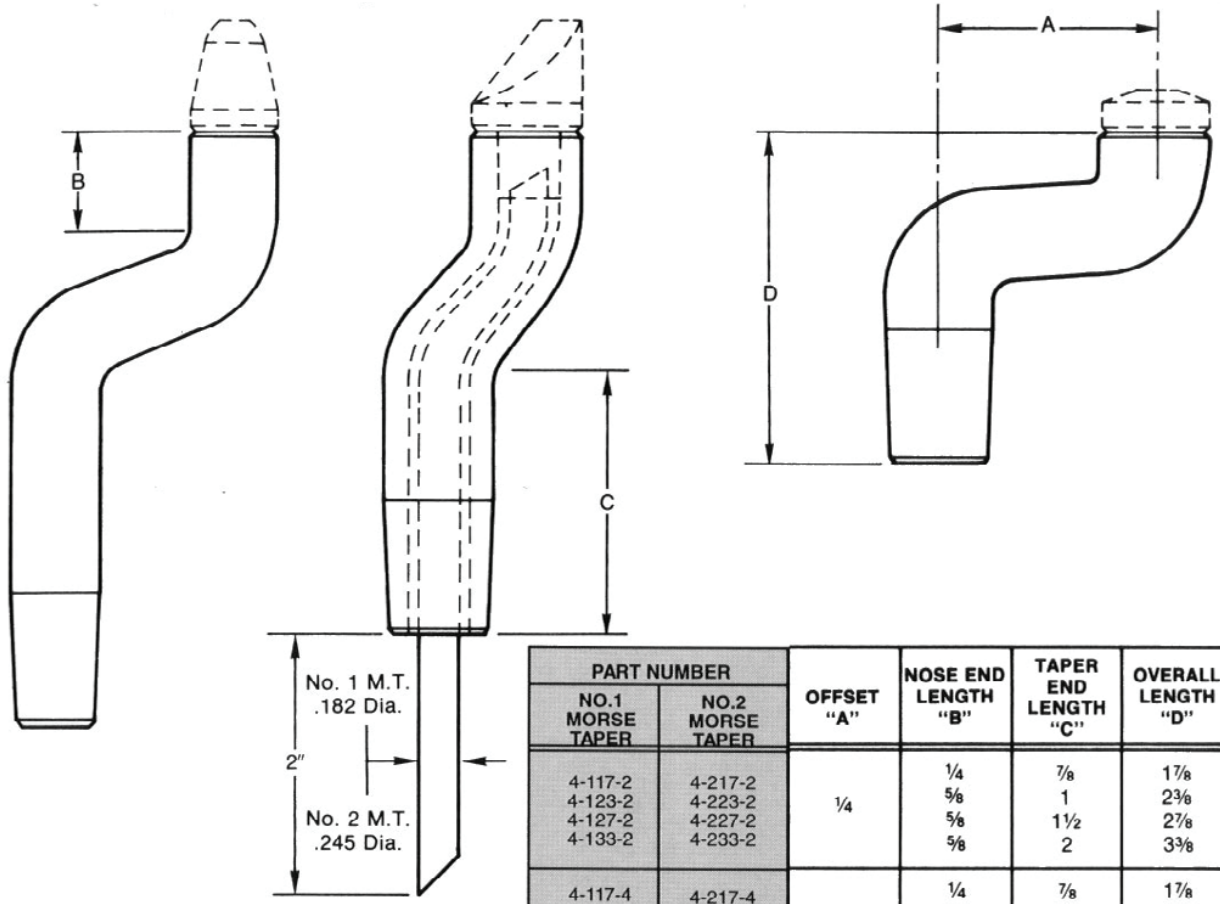

PART NUMBER		OFFSET "A"	NOSE END LENGTH "B"	TAPER END LENGTH "C"	OVERALL LENGTH "D"
NO.1 MORSE TAPER	NO.2 MORSE TAPER				
4-117-2	4-217-2	¼	¼	⅞	1⅞
4-123-2	4-223-2		⅝	1	2⅜
4-127-2	4-227-2		⅝	1½	2⅞
4-133-2	4-233-2		⅝	2	3⅜
4-117-4	4-217-4	½	¼	⅞	1⅞
4-123-4	4-223-4		⅝	1	2⅜
4-127-4	4-227-4		⅝	1½	2⅞
4-133-4	4-233-4		⅝	2	3⅜
4-117-6	4-217-6	¾	¼	⅞	1⅞
4-123-6	4-223-6		⅝	1	2⅜
4-127-6	4-227-6		⅝	1½	2⅞
4-133-6	4-233-6		⅝	2	3⅜
4-117-8	4-217-8	1	¼	⅞	1⅞
4-123-8	4-223-8		⅝	1	2⅜
4-127-8	4-227-8		⅝	1½	2⅞
4-133-8	4-233-8		⅝	2	3⅜
4-117-10	4-217-10	1¼	¼	⅞	1⅞
4-123-10	4-223-10		⅝	1	2⅜
4-127-10	4-227-10		⅝	1½	2⅞
4-133-10	4-233-10		⅝	2	3⅜
4-117-12	4-217-12	1½	¼	⅞	1⅞
4-123-12	4-223-12		⅝	1	2⅜
4-127-12	4-227-12		⅝	1½	2⅞
4-133-12	4-233-12		⅝	2	3⅜
4-117-14	4-217-14	1¾	¼	⅞	1⅞
4-123-14	4-223-14		⅝	1	2⅜
4-127-14	4-227-14		⅝	1½	2⅞
4-133-14	4-233-14		⅝	2	3⅜

ALL SHANKS ARE FURNISHED WITH WATER TUBES

ALL SHANKS ARE COLD FORMED FROM R.W.M.A. CLASS II ALLOY

PACIFIC

SINGLE BEND SHANKS

COLD FORMED FROM R.W.M.A CLASS II COPPER

FOR USE WITH INSERTS SHOWN ON PAGES 11 AND 12

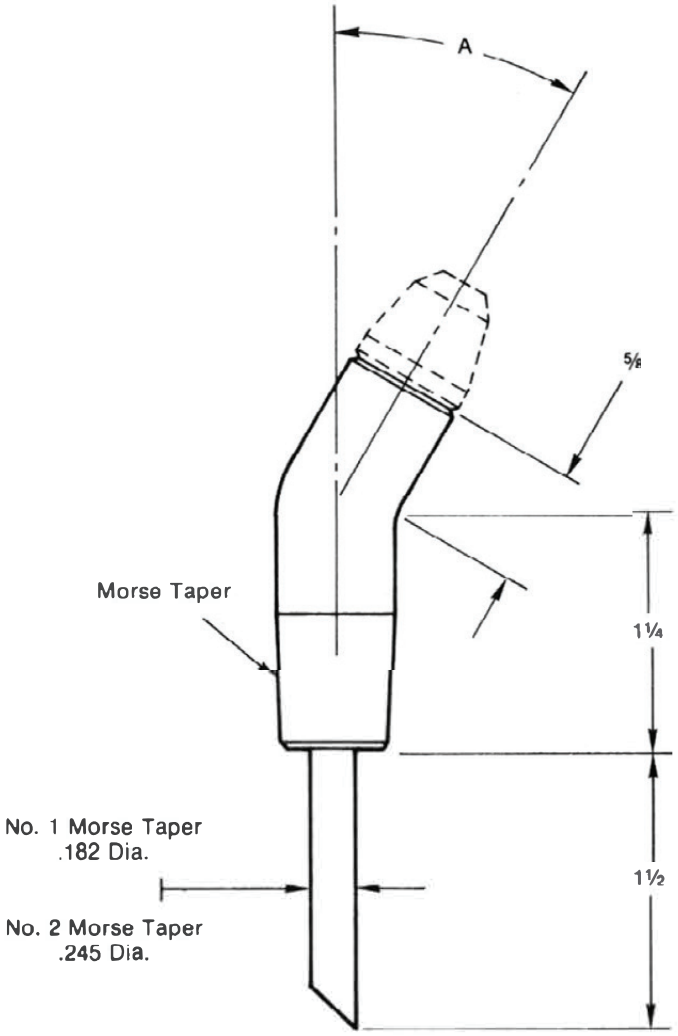

	A BEND	PART No.
No. 1 MORSE TAPER	15°	51-15
	30°	51-30
	45°	51-45
	60°	51-60
	75°	51-75
	90°	51-90
No. 2 MORSE TAPER	15°	52-15
	30°	52-30
	45°	52-45
	60°	52-60
	75°	52-75
	90°	52-90

WSI WELD SYSTEMS INTEGRATORS, INC.

844-WSI-WELD [974-9353]

www.WSIWeld.com · sales@wsiweld.com

PACIFIC

TAPER NOSE SHANKS

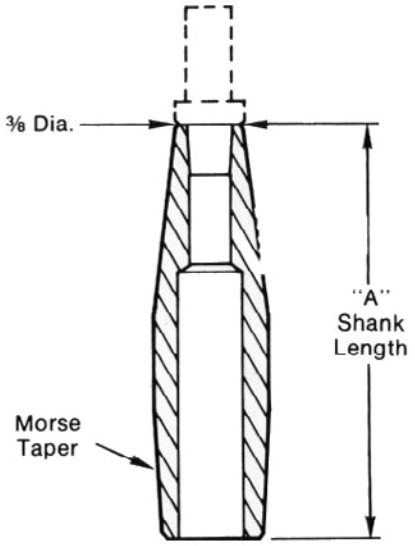

R.W.M.A. Class II Alloy

PART NUMBER		"A" SHANK LENGTH	USE WITH INSERTS
No. 1 MORSE TAPER	No. 2 MORSE TAPER		
2114 2120 2124	2214 2220 2224	1½ 2 2½	Series "O" - Page 10
2130 2134 2140	2230 2234 2240	3 3½ 4	

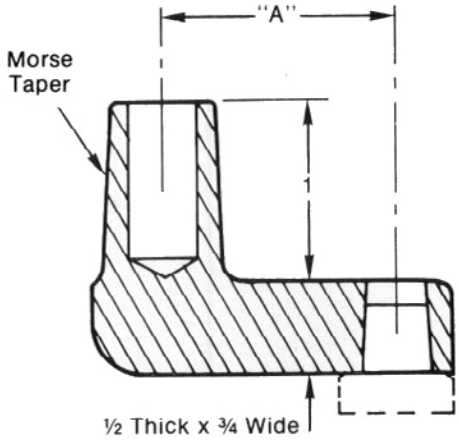

R.W.M.A. Class II Forging

OFFSET FORGED SHANKS

PART NUMBER		"A" OFFSET	USE WITH INSERTS
No. 1 MORSE TAPER	No. 2 MORSE TAPER		
OSF-10 OSF-11 OSF-12	OSF-20 OSF-21 OSF-22	1¼ 1¼ 1¼	Series "O" - Page 10 Series "I" - Page 11 Series "2" - Page 12

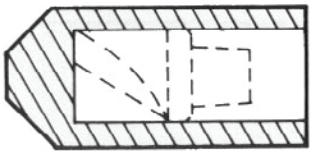

For Mating Offset Inserts Into Shanks
Straight Without Damage To Taper

INJECTOR PUNCH

PART NUMBER	USE WITH INSERTS
OP-1	Series "I" - Page 11
OP-2	Series "2" - Page 12

PACIFIC

SOCKET ELECTRODES
SERIES "T" INSERTS

FOR USE WITH HOLDERS SHOWN ON PAGE 24

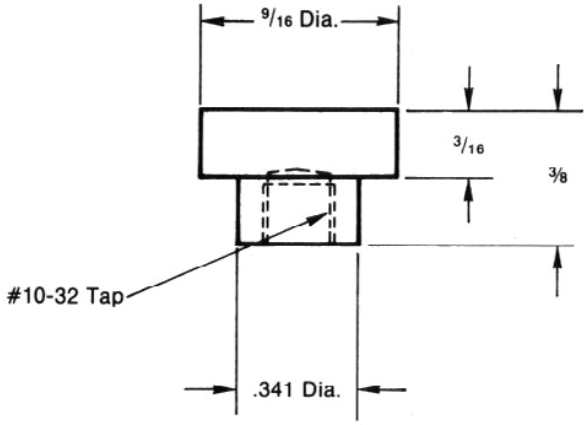

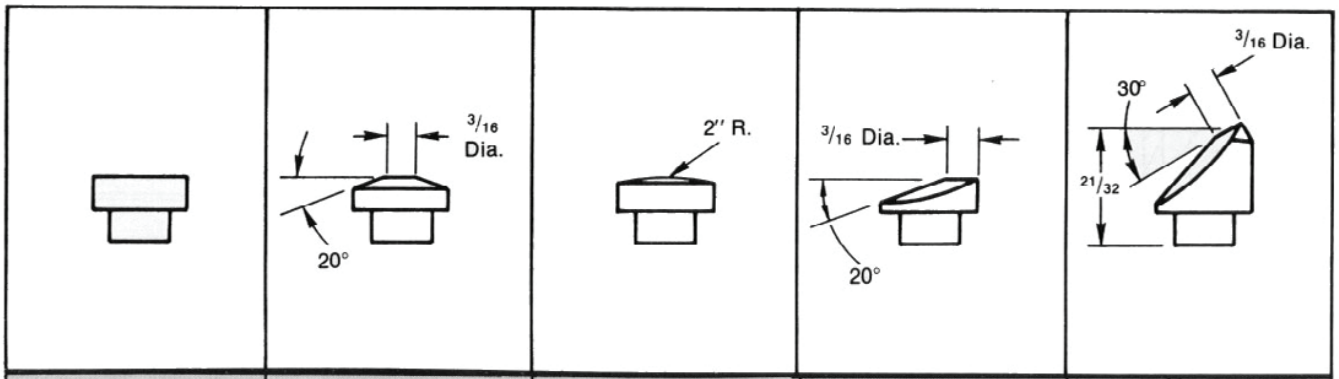

T-F-1	T-C-1	T-R-1	T-0-1	T-A-1
T-F-2	T-C-2	T-R-2	T-0-2	T-A-2

LAST DASH No. INDICATES CLASS OF ALLOY

WSI WELD SYSTEMS INTEGRATORS, INC.

844-WSI-WELD [974-9353]
www.WSIWeld.com · sales@wsiweld.com

PACIFIC | SERIES "O" INSERTS

ECONOMICAL "O" SERIES INSERTS. OFFERED IN FOUR ALLOY CLASSES, DESIGNED FOR USE WITH THE FOLLOWING PACIFIC SHANKS.

TAPER NOSE SHANKS (NO. 1 AND NO. 2 MORSE TAPER) PAGE 8

OFFSET FORGED SHANKS (NO. 1 AND NO. 2 MORSE TAPER) PAGE 8

CODE

O-S5-2

O – INSERT SERIES
-
S – NOSE SHAPE
5 – "A" LENGTH IN EIGHTHS
-
2 – CLASS ALLOY

	PART NUMBER			"A" HEAD LENGTH	WELDING FACE DIA.	HEAD DIA.	SKIRT LENGTH
	CLASS I	CLASS II	CLASS III				
"C" 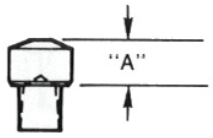 "A"	O-C-1	O-C-2	O-C-3	¼	5/32	⅜	¼
"R" 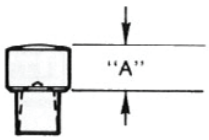 "A"	O-R-1	O-R-2	O-R-3	¼	2" R	⅜	¼
"F" 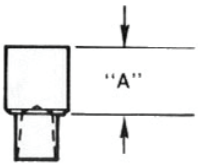 "A"	O-F2-1 O-F3-1 O-F5-1	O-F2-2 O-F3-2 O-F5-2	O-F2-3 O-F3-3 O-F5-3	¼ ⅜ ⅝	⅜	⅜	¼
"S" 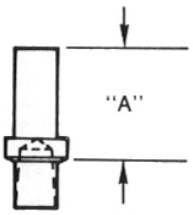 "A"	O-S3-1 O-S4-1 O-S5-1 O-S7-1 O-S8-1	O-S3-2 O-S4-2 O-S5-2 O-S7-2 O-S8-2	O-S3-3 O-S4-3 O-S5-3 O-S7-3 O-S8-3	⅜ ½ ⅝ ⅞ 1"	¼	⅜	¼

WSI WELD SYSTEMS INTEGRATORS, INC.

844-WSI-WELD [974-9353]
www.WSIWeld.com · sales@wsiweld.com

PACIFIC

SERIES "1" INSERTS

FOR USE WITH No. 1 MORSE TAPER PACIFIC SHANKS

STRAIGHT SHANKS - PAGE 5

DOUBLE BEND SHANKS - PAGE 6

SINGLE BEND SHANKS - PAGE 7

OFFSET FORGED SHANKS - PAGE 8

CODE

1-D-3

1 – INSERT SERIES

-

D – NOSE SHAPE

-

3 – CLASS ALLOY

"OH"
OFFSET
SHORT HEAD

"FH"
FLAT
SHORT HEAD

"RH"
RADIUS
SHORT HEAD

"CH"
CONE
SHORT HEAD

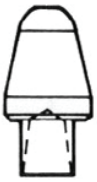

"P"
POINTED

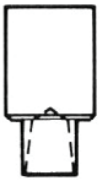

"F"
FLAT

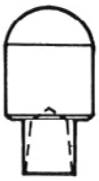

"D"
DOME

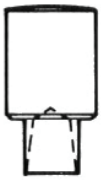

"R"
RADIUS

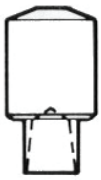

"C"
CONE

"O"
OFFSET

		PART NUMBER			WELDING FACE DIA.	HEAD DIA.	HEAD LENGTH	SKIRT LENGTH
		CLASS I	CLASS II	CLASS III				
POINTED FLAT DOME	"P" "F" "D"	1-P-1 1-F-1 1-D-1	1-P-2 1-F-2 1-D-2	1-P-3 1-F-3 1-D-3	3/16 ½ ⅛	½	⅝	5/16
RADIUS CONE OFFSET	"R" "C" "O"	1-R-1 1-C-1 1-O-1	1-R-2 1-C-2 1-O-2	1-R-3 1-C-3 1-O-3	2" R 3/16 3/16			
SHORT HEAD	"OH" "FH" "RH" "CH"	1-OH-1 1-FH-1 1-RH-1 1-CH-1	1-OH-2 1-FH-2 1-RH-2 1-CH-2	1-OH-3 1-FH-3 1-RH-3 1-CH-3	3/16 ½ 2 "R 3/16	½	¼	¼

WSI WELD SYSTEMS INTEGRATORS, INC.

844-WSI-WELD [974-9353]

www.WSIWeld.com · sales@wsiweld.com

PACIFIC

SERIES "2" INSERTS

FOR USE WITH No. 2 MORSE TAPER PACIFIC SHANKS

STRAIGHT SHANKS - PAGE 5

DOUBLE BEND SHANKS - PAGE 6

SINGLE BEND SHANKS - PAGE 7

OFFSET FORGED SHANKS - PAGE 8

CODE

2-P-2

2 – INSERT SERIES

-

P – NOSE SHAPE

-

2 – CLASS ALLOY

"FH" FLAT SHORT HEAD | "RH" RADIUS SHORT HEAD | "CH" CONE SHORT HEAD | "OH" OFFSET SHORT HEAD

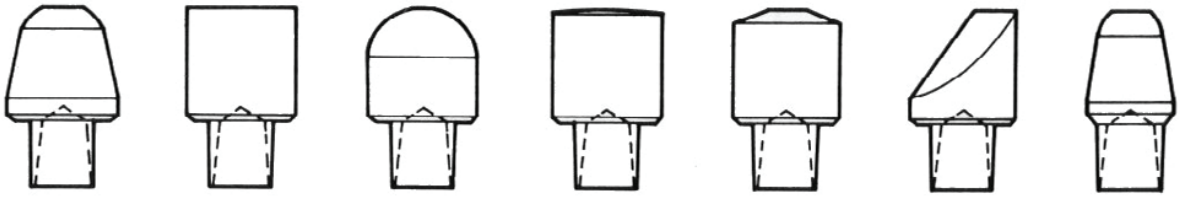

"P" POINTED | "F" FLAT | "D" DOME | "R" RADIUS | "C" CONE | "O" OFFSET | "T" TAPERED

		PART NUMBER			WELDING FACE DIA.	HEAD DIA.	HEAD LENGTH	SKIRT LENGTH
		CLASS I	CLASS II	CLASS III				
POINTED FLAT DOME	"P" "F" "D"	2-P-1 2-F-1 2-D-1	2-P-2 2-F-2 2-D-2	2-P-3 2-F-3 2-D-3	¼ ⅝ ⅛	⅝	⅝	⅜
RADIUS CONE OFFSET	"R" "C" "O"	2-R-1 2-C-1 2-O-1	2-R-2 2-C-2 2-O-2	2-R-3 2-C-3 2-O-3	2" R ¼ ¼			
TAPERED	"T"	2-T-1	2-T-2	2-T-3	¼	½		
SHORT HEAD	"FH" "RH" "CH" "OH"	2-FH-1 2-RH-1 2-CH-1 2-OH-1	2-FH-2 2-RH-2 2-CH-2 2-OH-2	2-FH-3 2-RH-3 2-CH-3 2-OH-3	⅝ 2" R ¼ ¼	⅝	¼	¼

WSI WELD SYSTEMS INTEGRATORS, INC.

844-WSI-WELD [974-9353]

www.WSIWeld.com · sales@wsiweld.com

PACIFIC

SERIES "3" INSERTS

FOR USE WITH No. 3 MORSE TAPER SHANKS - PAGE 5

CODE

3-P-2

3 – INSERT SERIES
-
P – NOSE SHAPE
-
2 – CLASS ALLOY

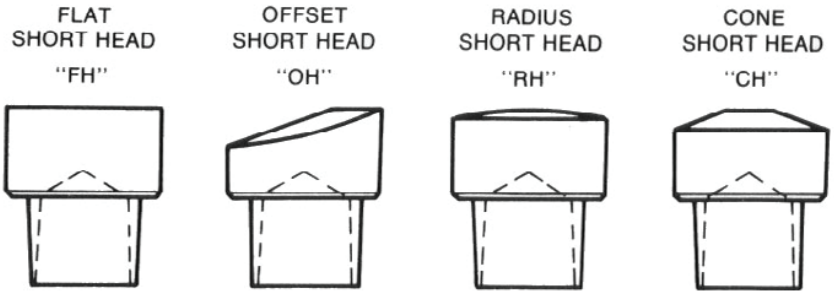

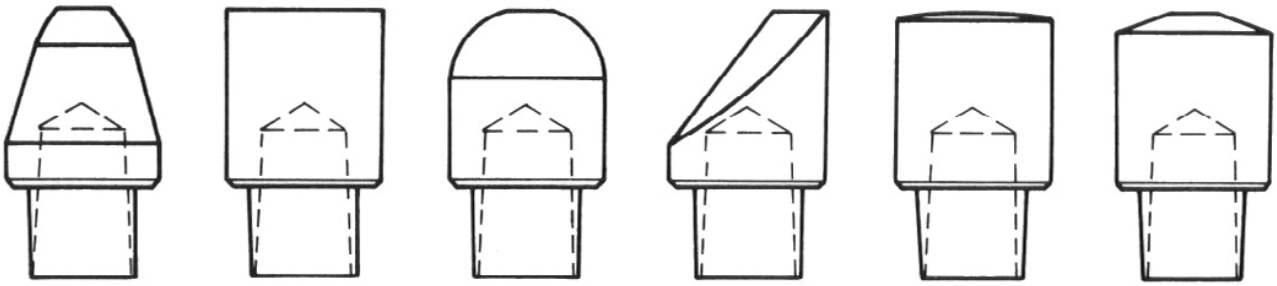

		PART NUMBER			WELDING FACE DIA.	HEAD DIA.	HEAD LENGTH	SKIRT LENGTH
		CLASS I	CLASS II	CLASS III				
POINTED FLAT DOME	"P" "F" "D"	3-P-1 3-F-1 3-D-1	3-P-2 3-F-2 3-D-2	3-P-3 3-F-3 3-D-3	5/16 7/8 1/4	7/8	1"	1/2
OFFSET RADIUS CONE	"O" "R" "C"	3-O-1 3-R-1 3-C-1	3-O-2 3-R-2 3-C-2	3-O-3 3-R-3 3-C-3	5/16 2" R. 5/16			
SHORT HEAD	"FH" "OH" "RH" "CH"	3-FH-1 3-OH-1 3-RH-1 3-CH-1	3-FH-2 3-OH-2 3-RH-2 3-CH-2	3-FH-3 3-OH-3 3-RH-3 3-CH-3	7/8 5/16 2" R. 5/16	7/8	1/2	1/2

WSI WELD SYSTEMS INTEGRATORS, INC.

844-WSI-WELD [974-9353]
www.WSIWeld.com · sales@wsiweld.com

PACIFIC

INSERT EXTRACTOR PLIERS

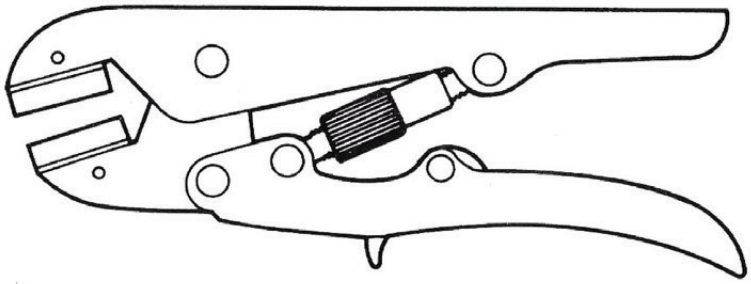

Jaws May Be
Ordered Separately

P-22 PLIERS

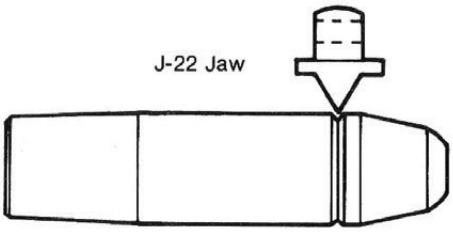

For Extracting Pacific Inserts

P-33 PLIERS

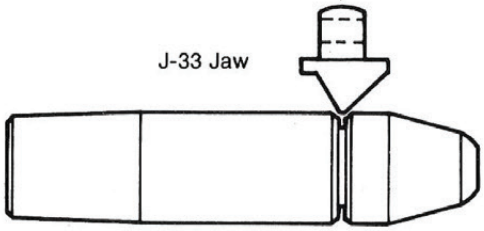

For Extracting Automotive Style

DRILLS AND REAMERS

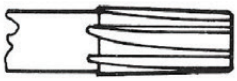

Hollow End To Clear Water Tube in
Double And Single Bend Shanks, Etc.

USE	INSERT SERIES	PART NUMBER
DRILLS AND HOLLOW REAMERS FOR REWORKING WORN INSERT SOCKETS IN PACIFIC SHANKS AND MAKING INSERT SOCKETS IN PROJECTION DIES ETC.	"O"	D-O DRILL R-O REAMER
	"1"	D-1 DRILL R-1 REAMER
	"2"	D-2 DRILL D-2 REAMER
	"3"	D-3 DRILL R-3 REAMER
	"4"	D-4 DRILL R-4 REAMER

PACIFIC

MORSE TAPER ADAPTERS

OTHER TAPER AND THREADED ADAPTERS ON REQUEST.

ELECTRODE ADAPTERS FOR PACIFIC UNIVERSAL AND THREADED HOLDERS SHOWN ON PAGE 26

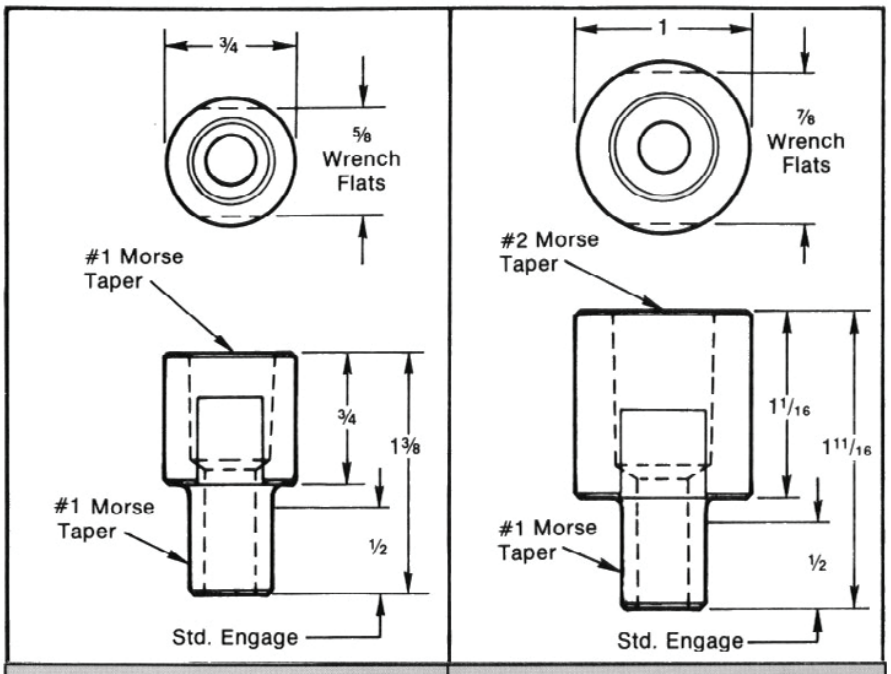

PART NUMBER – 1-MTA-1	PART NUMBER – 1-MTA-2

ALL ADAPTERS – R.W.M.A. CLASS II ALLOY

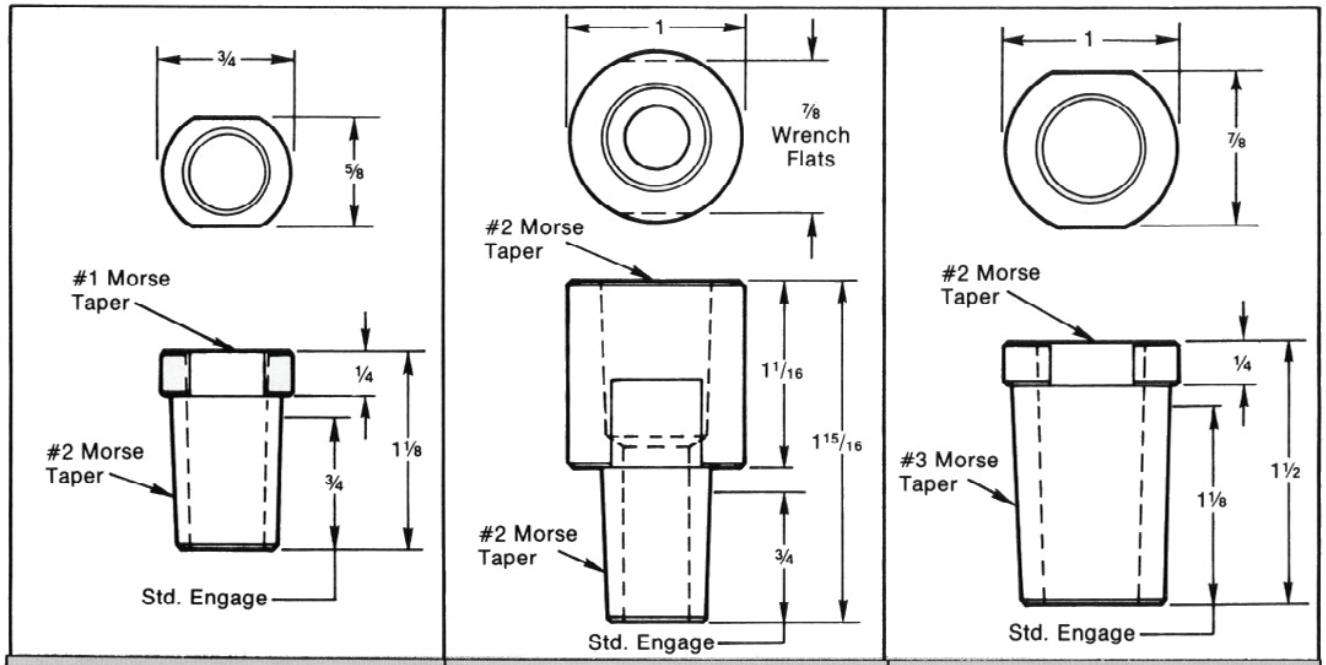

PART NUMBER – 2-MTA-1	PART NUMBER – 2-MTA-2	PART NUMBER -- 3-MTA-2

PACIFIC

BACK-UP INSERTS AND ELECTRODES

BACK-UP INSERTS

R.W.M.A. CLASS II ALLOY

FOR USE WITH NO. 1 AND NO. 2 MORSE TAPER PACIFIC SHANKS.

REFER TO PAGE 5 FOR MATING SHANKS

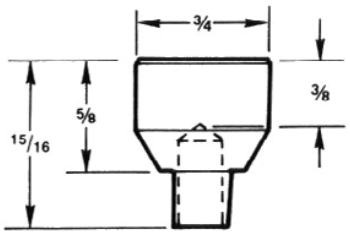

SERIES "1" INSERT

PART NUMBER – 1-B-2

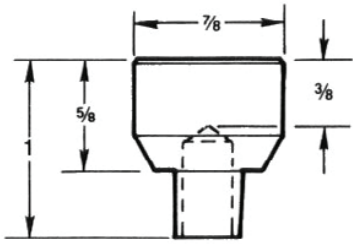

SERIES "2" INSERT

PART NUMBER – 2-B-2

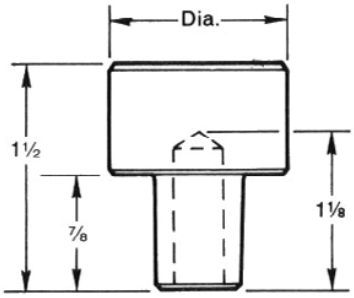

NO. 1 MORSE TAPER

BACK-UP ELECTRODES

R.W.M.A. CLASS II ALLOY

PART NUMBER		
NO. 1 MORSE TAPER	Dia.	NO. 2 MORSE TAPER
1B-75-2	3/4	2B-75-2
1B-87-2	7/8	2B-87-2
1B-100-2	1"	2B-100-2
1B-125-2	1 1/4	2B-125-2

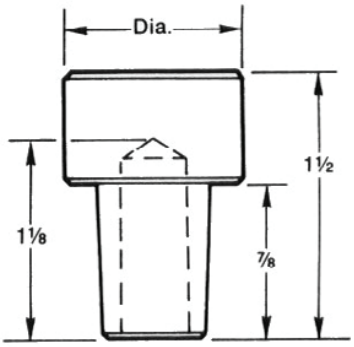

NO. 2 MORSE TAPER

SWIVEL HEAD ELECTRODES

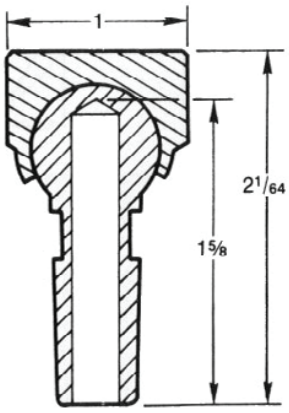

PART NUMBER
NO. 1 MORSE TAPER ± 1ST-100-1 NO. 2 MORSE TAPER ± 2ST-100-1

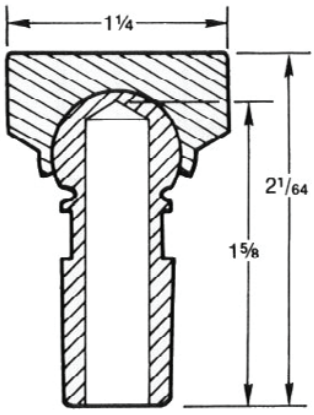

PART NUMBER
NO. 1 MORSE TAPER ± 1ST-125-1 NO. 2 MORSE TAPER ± 2ST-125-1

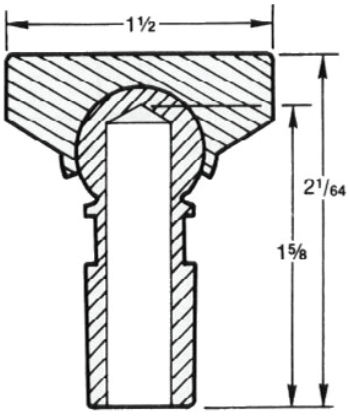

PART NUMBER
NO. 1 MORSE TAPER ± 1ST-150-1 NO. 2 MORSE TAPER ± 2ST-150-1

WSI WELD SYSTEMS INTEGRATORS, INC.

844-WSI-WELD [974-9353]

www.WSIWeld.com · sales@wsiweld.com

PACIFIC

ONE PIECE STRAIGHT ELECTRODES

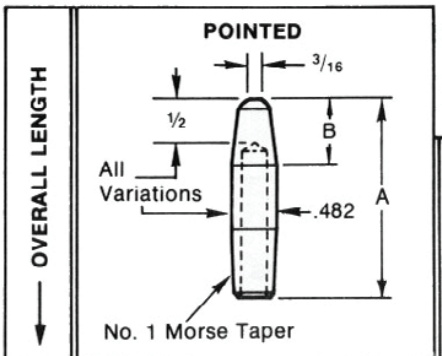

No. 1 MORSE TAPER

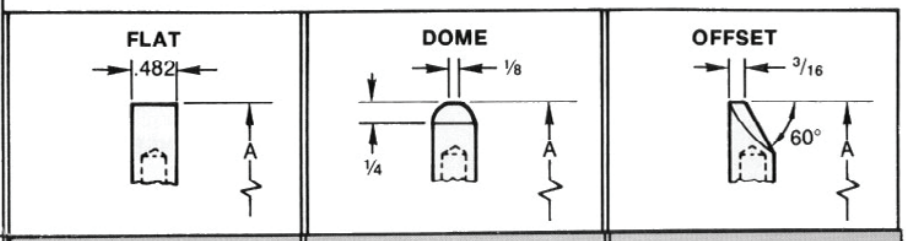

A	PART NUMBER CLASS I	PART NUMBER CLASS II	B	PART NUMBER CLASS I	PART NUMBER CLASS II	PART NUMBER CLASS I	PART NUMBER CLASS II	PART NUMBER CLASS I	PART NUMBER CLASS II
1¼ 1½ 1¾	P-112-1 P-114-1 P-116-1	P-112-2 P-114-2 P-116-2	½ ½ ¾	F-112-1 F-114-1 F-116-1	F-112-2 F-114-2 F-116-2	D-112-1 D-114-1 D-116-1	D-112-2 D-114-2 D-116-2	O-112-1 O-114-1 O-116-1	O-112-2 O-114-2 O-116-2
2 2¼ 2½	P-120-1 P-122-1 P-124-1	P-120-2 P-122-2 P-124-2	¾	F-120-1 F-122-1 F-124-1	F-120-2 F-122-2 F-124-2	D-120-1 D-122-1 D-124-1	D-120-2 D-122-2 D-124-2	O-120-1 O-122-1 O-124-1	O-120-2 O-122-2 O-124-2
2¾ 3 3¼	P-126-1 P-130-1 P-132-1	P-126-2 P-130-2 P-132-2	¾	F-126-1 F-130-1 F-132-1	F-126-2 F-130-2 F-132-2	D-126-1 D-130-1 D-132-1	D-126-2 D-130-2 D-132-2	O-126-1 O-130-1 O-132-1	O-126-2 O-130-2 O-132-2

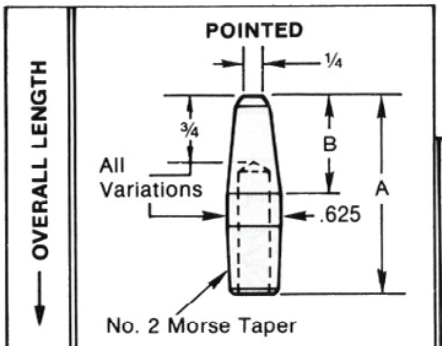

OTHER STANDARD NOSE SHAPES AVAILABLE
(C) CONE
(R) RADIUS

No. 2 MORSE TAPER

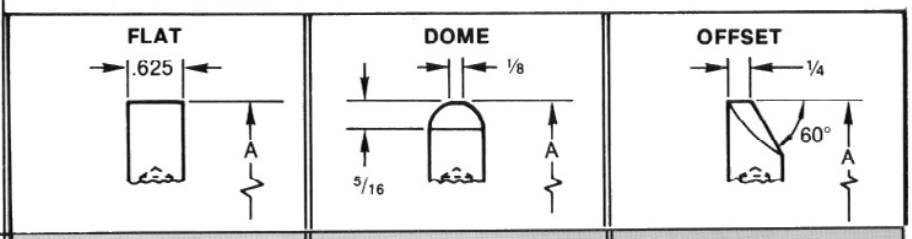

A	PART NUMBER CLASS I	PART NUMBER CLASS II	B	PART NUMBER CLASS I	PART NUMBER CLASS II	PART NUMBER CLASS I	PART NUMBER CLASS II	PART NUMBER CLASS I	PART NUMBER CLASS II
1¼ 1½ 1¾	P-212-1 P-214-1 P-216-1	P-212-2 P-214-2 P-216-2	½ ¾ ¾	F-212-1 F-214-1 F-216-1	F-212-2 F-214-2 F-216-2	D-212-1 D-214-1 D-216-1	D-212-2 D-214-2 D-216-2	O-212-1 O-214-1 O-216-1	O-212-2 O-214-2 O-216-2
2 2¼ 2½	P-220-1 P-222-1 P-224-1	P-220-2 P-222-2 P-224-2	1⅛	F-220-1 F-222-1 F-224-1	F-220-2 F-222-2 F-224-2	D-220-1 D-222-1 D-224-1	D-220-2 D-222-2 D-224-2	O-220-1 O-222-1 O-224-1	O-220-2 O-222-2 O-224-2
2¾ 3 3¼	P-226-1 P-230-1 P-232-1	P-226-2 P-230-2 P-232-2	1⅛	F-226-1 F-230-1 F-232-1	F-226-2 F-230-2 F-232-2	D-226-1 D-230-1 D-232-1	D-226-2 D-230-2 D-232-2	O-226-1 O-230-1 O-232-1	O-226-2 O-230-2 O-232-2

WSI WELD SYSTEMS INTEGRATORS, INC.

844-WSI-WELD [974-9353]
www.WSIWeld.com · sales@wsiweld.com

PACIFIC

ONE PIECE STRAIGHT ELECTRODES

No. 3 MORSE TAPER

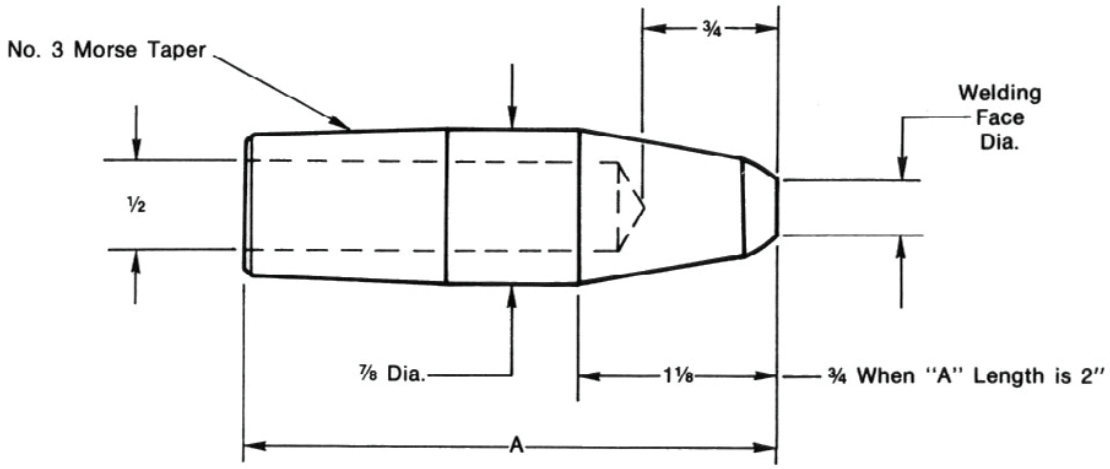

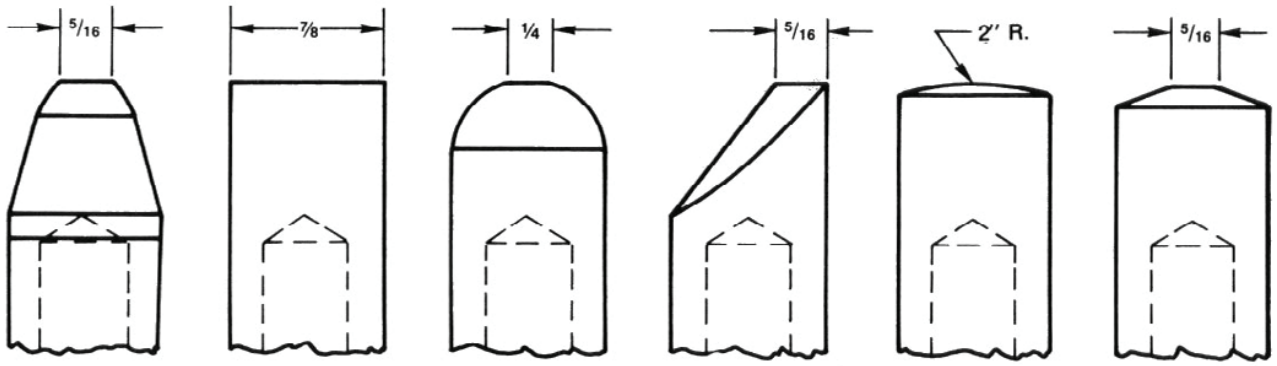

A OVERALL LENGTH	PART NUMBER						A OVERALL LENGTH
	R.W.M.A. CLASS I ALLOY COPPER						
	"P"	"F"	"D"	"O"	"R"	"C"	
2 2½ 3	P-320-1 P-324-1 P-330-1	F-320-1 F-324-1 F-330-1	D-320-1 D-324-1 D-330-1	O-320-1 O-324-1 O-330-1	R-320-1 R-324-1 R-330-1	C-320-1 C-324-1 C-330-1	2 2½ 3
	R.W.M.A. CLASS II ALLOY COPPER						
2 2½ 3	P-320-2 P-324-2 P-330-2	F-320-2 F-324-2 F-330-2	D-320-2 D-324-2 D-330-2	O-320-2 O-324-2 O-330-2	R-320-2 R-324-2 R-330-2	C-320-2 C-324-2 C-330-2	2 2½ 3

PACIFIC

ONE PIECE DOUBLE BEND ELECTRODES

COLD FORMED FROM R.W.M.A. CLASS I AND II ALLOY

For Nose Dimensions
Refer To Page 17

Other Nose Shapes
Available—
"CD"—Cone
"RD"—2" Radius

Water Tube Size
No. 1 Morse Taper .182 Dia.
No. 2 Morse Taper .245 Dia.

POINTED

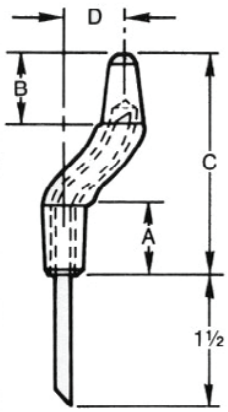

"PD"

FLAT

"FD"

DOME

"DD"

OFFSET

"OD"

No. 1 MORSE TAPER

TAPER LENGTH "A"	NOSE LENGTH "B"	OVERALL LENGTH "C"	OFFSET "D"	PART NUMBER CLASS I	PART NUMBER CLASS II	PART NUMBER CLASS I	PART NUMBER CLASS II	PART NUMBER CLASS I	PART NUMBER CLASS II	PART NUMBER CLASS I	PART NUMBER CLASS II
¾	¾	2	½	PD-11-A4	PD-12-A4	FD-11-A4	FD-12-A4	DD-11-A4	DD-12-A4	OD-11-A4	OD-12-A4
1¾	¾	3		PD-11-B4	PD-12-B4	FD-11-B4	FD-12-B4	DD-11-B4	DD-12-B4	OD-11-B4	OD-12-B4
¾	1¾	3		PD-11-C4	PD-12-C4	FD-11-C4	FD-12-C4	DD-11-C4	DD-12-C4	OD-11-C4	OD-12-C4
¾	¾	2	¾	PD-11-A6	PD-12-A6	FD-11-A6	FD-12-A6	DD-11-A6	DD-12-A6	OD-11-A6	OD-12-A6
1¾	¾	3		PD-11-B6	PD-12-B6	FD-11-B6	FD-12-B6	DD-11-B6	DD-12-B6	OD-11-B6	OD-12-B6
¾	1¾	3		PD-11-C6	PD-12-C6	FD-11-C6	FD-12-C6	DD-11-C6	DD-12-C6	OD-11-C6	OD-12-C6
¾	¾	2	1	PD-11-A8	PD-12-A8	FD-11-A8	FD-12-A8	DD-11-A8	DD-12-A8	OD-11-A8	OD-12-A8
1¾	¾	3		PD-11-B8	PD-12-B8	FD-11-B8	FD-12-B8	DD-11-B8	DD-12-B8	OD-11-B8	OD-12-B8
¾	1¾	3		PD-11-C8	PD-12-C8	FD-11-C8	FD-12-C8	DD-11-C8	DD-12-C8	OD-11-C8	OD-12-C8
¾	¾	2⅛	1¼	PD-11-A10	PD-12-A10	FD-11-A10	FD-12-A10	DD-11-A10	DD-12-A10	OD-11-A10	OD-12-A10
1¾	¾	3⅛		PD-11-B10	PD-12-B10	FD-11-B10	FD-12-B10	DD-11-B10	DD-12-B10	OD-11-B10	OD-12-B10
¾	1¾	3⅛		PD-11-C10	PD-12-C10	FD-11-C10	FD-12-C10	DD-11-C10	DD-12-C10	OD-11-C10	OD-12-C10

No. 2 MORSE TAPER

TAPER LENGTH "A"	NOSE LENGTH "B"	OVERALL LENGTH "C"	OFFSET "D"	POINTED PART NUMBER CLASS I	POINTED PART NUMBER CLASS II	FLAT PART NUMBER CLASS I	FLAT PART NUMBER CLASS II	DOME PART NUMBER CLASS I	DOME PART NUMBER CLASS II	OFFSET PART NUMBER CLASS I	OFFSET PART NUMBER CLASS II
1	1	2½	½	PD-21-A4	PD-22-A4	FD-21-A4	FD-22-A4	DD-21-A4	DD-22-A4	OD-21-A4	OD-22-A4
1¾	1	3¼		PD-21-B4	PD-22-B4	FD-21-B4	FD-22-B4	DD-21-B4	DD-22-B4	OD-21-B4	OD-22-B4
1	1¾	3¼		PD-21-C4	PD-22-C4	FD-21-C4	FD-22-C4	DD-21-C4	DD-22-C4	OD-21-C4	OD-22-C4
1	1	2⅝	¾	PD-21-A6	PD-22-A6	FD-21-A6	FD-22-A6	DD-21-A6	DD-22-A6	OD-21-A6	OD-22-A6
1¾	1	3⅜		PD-21-B6	PD-22-B6	FD-21-B6	FD-22-B6	DD-21-B6	DD-22-B6	OD-21-B6	OD-22-B6
1	1¾	3⅜		PD-21-C6	PD-22-C6	FD-21-C6	FD-22-C6	DD-21-C6	DD-22-C6	OD-21-C6	OD-22-C6
1	1	2⅝	1	PD-21-A8	PD-22-A8	FD-21-A8	FD-22-A8	DD-21-A8	DD-22-A8	OD-21-A8	OD-22-A8
1¾	1	3⅜		PD-21-B8	PD-22-B8	FD-21-B8	FD-22-B8	DD-21-B8	DD-22-B8	OD-21-B8	OD-22-B8
1	1¾	3⅜		PD-21-C8	PD-22-C8	FD-21-C8	FD-22-C8	DD-21-C8	DD-22-C8	OD-21-C8	OD-22-C8
1	1	2¾	1¼	PD-21-A10	PD-22-A10	FD-21-A10	FD-22-A10	DD-21-A10	DD-22-A10	OD-21-A10	OD-22-A10
1¾	1	3½		PD-21-B10	PD-22-B10	FD-21-B10	FD-22-B10	DD-21-B10	DD-22-B10	OD-21-B10	OD-22-B10
1	1¾	3½		PD-21-C10	PD-22-C10	FD-21-C10	FD-22-C10	DD-21-C10	DD-22-C10	OD-21-C10	OD-22-C10

WSI WELD SYSTEMS INTEGRATORS, INC.

844-WSI-WELD [974-9353]
www.WSIWeld.com · sales@wsiweld.com

PACIFIC | HOLDERS

H SERIES—NON EJECTOR TYPE HOLDERS

HE SERIES—EJECTOR TYPE HOLDERS

HU SERIES—UNIVERSAL EJECTOR TYPE HOLDERS

HL SERIES—LIGHT DUTY HOLDERS

On the following pages you will find the "Pacific" line of holders consisting of NON-EJECTOR, EJECTOR, UNIVERSAL and LIGHT-DUTY types.

"Pacific" holders are strong, dependable units with all barrels, adapters, heads, and tee connections made from RWMA Class II copper. Components are made of hard alloy stainless steel. The simple construction and durability of "Pacific" holders will give long service with minimum repair and down time.

Another desirable feature of these units is their versatility.

All 1" diameter barrels which are threaded on both ends are interchangeable and can be used with any threaded Morse taper adapter or offset head having a ⅞-14 thread.

All 1¼", and 1½" diameter barrels which are threaded on both ends are interchangeable and can be used with any threaded Morse taper adapter or offset head having a 1-14 thread.

All water connections will fit all barrels.

Tee connections (Page - 25) and threaded Morse taper adapters (Page - 26) are to be ordered separately to meet your requirements.

PACIFIC

H SERIES HOLDERS

WATER COOLED NON-EJECTOR TYPE

Note:
Order Separately
No. 1 and No. 2 Morse Taper Adapters
Page 26

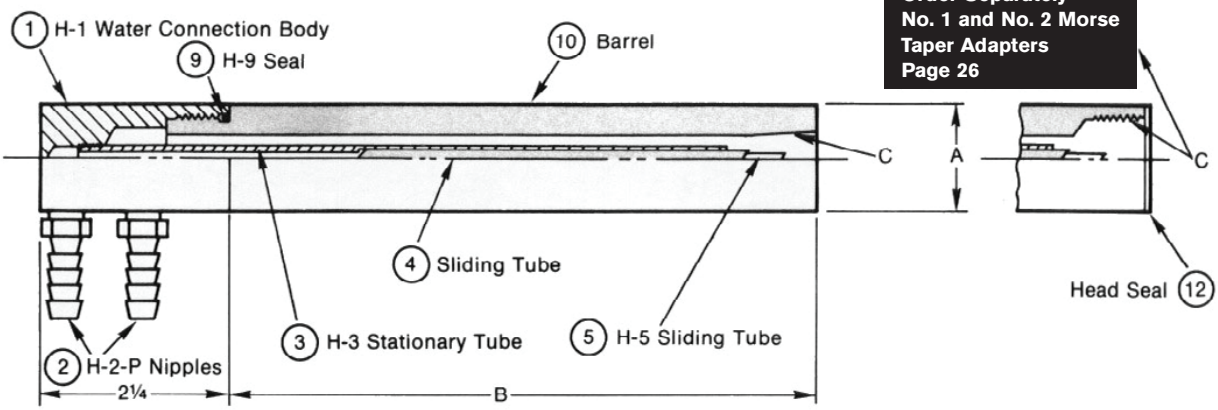

A DIA.	B LENGTH	C TAPER OR THREAD	HOLDER ASSY. No.	WATER CONNECTION ASSY. No. INCLUDES PARTS ①②③④	SLIDING TUBE ④	SLIDING TUBE ⑤	HEAD SEAL ⑫	BARREL WITH SEALS ⑨⑩⑫
1	8	1	H-408-1	WC-8	H-4-8	H-5		H1-408
		2	H-408-2					H2-408
		⅞—14	H-408-T			H-5	H-12-4	HT-408
	12	1	H-412-1	WC-12	H-4-12	H-5		H1-412
		2	H-412-2					H2-412
		⅞—14	H-412-T			H-5	H-12-4	HT-412
1¼	8	1	H-508-1	WC-8	H-4-8	H-5		H1-508
		2	H-508-2					H2-508
		3	H-508-3					H3-508
		1—14	H-508-T			H-5	H-12-5	HT-508
	12	1	H-512-1	WC-12	H-4-12	H-5		H1-512
		2	H-512-2					H2-512
		3	H-512-3					H3-512
		1—14	H-512-T			H-5	H-12-5	HT-512
1½	8	2	H-608-2	WC-8	H-4-8			H2-608
		3	H-608-3					H3-608
		1—14	H-608-T			H-5	H-12-5	HT-608
	12	2	H-612-2	WC-12	H-4-12			H2-612
		3	H-612-3					H3-612
		1—14	H-612-T			H-5	H-12-5	HT-612

WSI WELD SYSTEMS INTEGRATORS, INC.

844-WSI-WELD [974-9353]
www.WSIWeld.com · sales@wsiweld.com

PACIFIC

HE SERIES HOLDERS

WATER COOLED EJECTOR TYPE

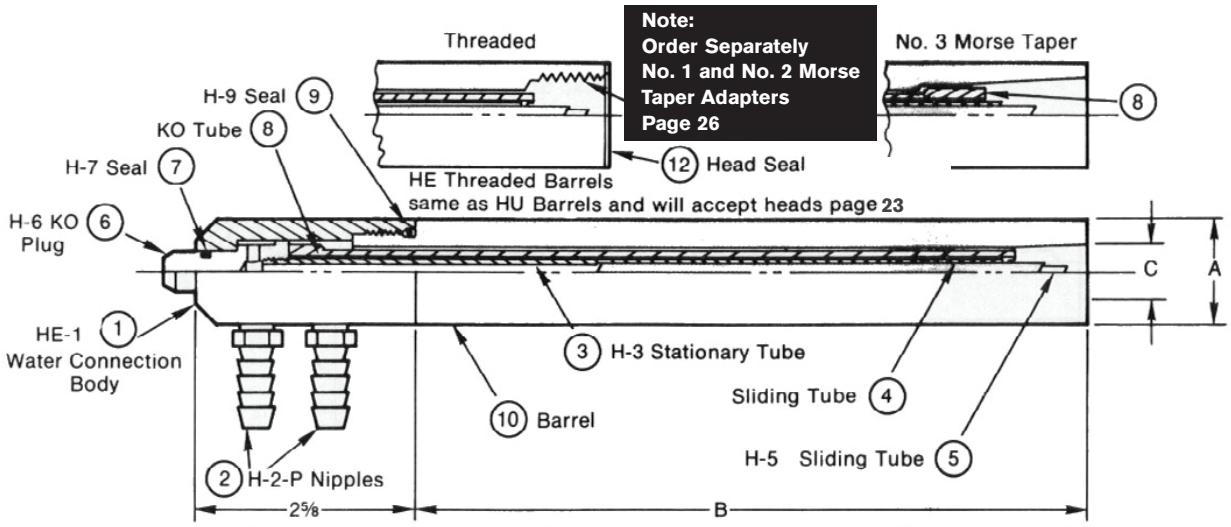

A DIA.	B LENGTH	C TAPER OR THREAD	HOLDER ASSY. No.	WATER CONNECTION ASSY. No. INCLUDES PARTS ①②③④⑥⑦	SLIDING TUBE ④	SLIDING TUBE ⑤	KO TUBE ⑧	HEAD SEAL ⑫	BARREL WITH SEALS ⑨⑩⑫
1	8	1	HE-408-1	WC-E8	H-4-8	H-5	H8-8-1		H1-408
		2	HE-408-2				H8-8-2		H2-408
		⅞ — 14	HE-408-T			H-5	H8-8-T	H-12-4	HT-408
	12	1	HE-412-1	WC-E12	H-4-12	H-5	H8-12-1		H1-412
		2	HE-412-2				H8-12-2		H2-412
		⅞ — 14	HE-412-T			H-5	H8-12-T	H-12-4	HT-412
1¼	8	1	HE-508-1	WC-E8	H-4-8	H-5	H8-8-1		H1-508
		2	HE-508-2				H8-8-2		H2-508
		3	HE-508-3				H8-8-3		H3-508
		1—14	HE-508-T			H-5	H8-8-T	H-12-5	HT-508
	12	1	HE-512-1	WC-E12	H-4-12	H-5	H8-12-1		H1-512
		2	HE-512-2				H8-12-2		H2-512
		3	HE-512-3				H8-12-3		H3-512
		1—14	HE-512-T			H-5	H8-12-T	H-12-5	HT-512
1½	8	1	HE-608-1	WC-E8	H-4-8	H-5	H8-8-1		H1-608
		2	HE-608-2				H8-8-2		H2-608
		3	HE-608-3				H8-8-3		H3-608
		1—14	HE-608-T			H-5	H8-8-T	H-12-5	HT-608
	12	1	HE-612-1	WC-E12	H-4-12	H-5	H8-12-1		H1-612
		2	HE-612-2				H8-12-2		H2-612
		3	HE612-3				H8-12-3		H3-612
		1—14	HE-612-T			H-5	H8-12-T	H-12-5	HT-612

WSI WELD SYSTEMS INTEGRATORS, INC.

844-WSI-WELD [974-9353]

www.WSIWeld.com · sales@wsiweld.com

PACIFIC

HU SERIES HOLDERS

WATER COOLED EJECTOR TYPE

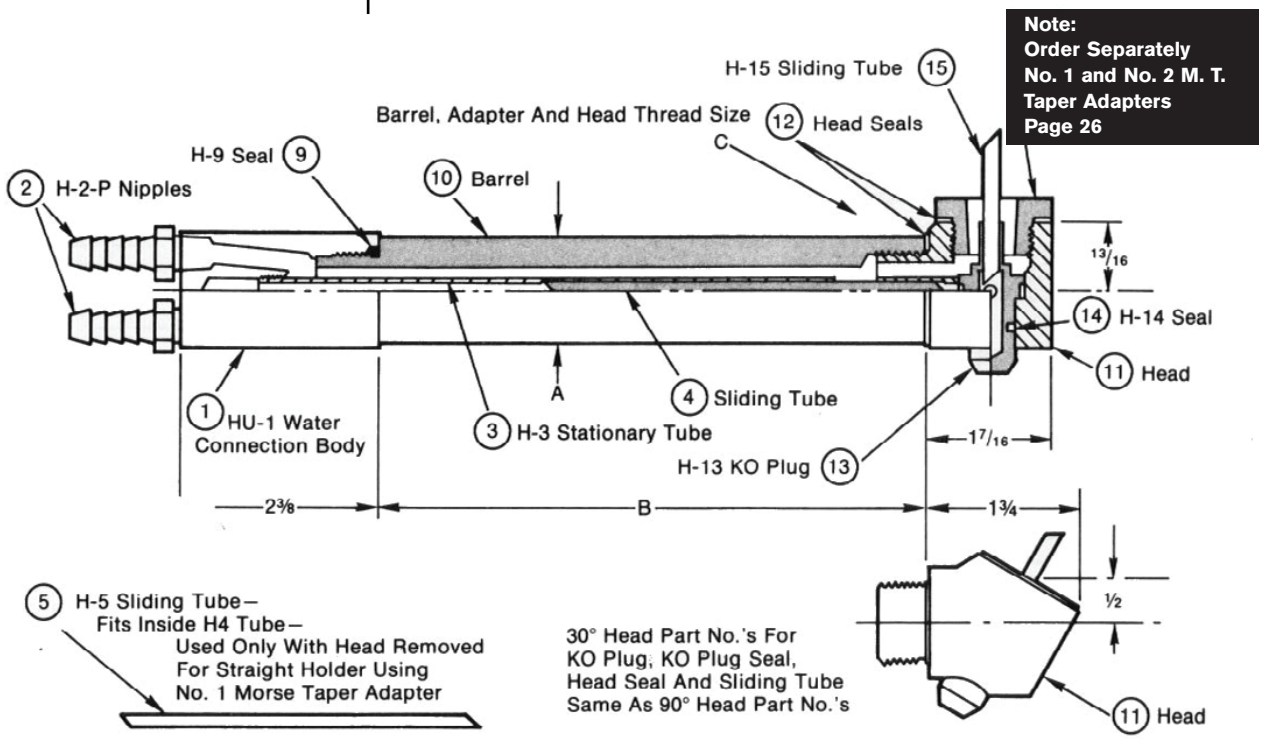

A DIA.	B LENGTH	C THREAD	HOLDER ASSY. NUMBER –90 IS 90 HEAD –30 IS 30 HEAD	HEAD ASSY. NUMBER INCLUDES PARTS (11)(12)(13)(14)(15)	HEAD (11)	WATER CONNECTION ASSY. No. INCLUDES PARTS (1)(2)(3)(4)	SLIDING TUBE (4)	HEAD SEALS (12)	BARREL WITH SEALS (9)(10)(12)
1	8	⅞—14	HU-408-30	HU-430	H-11-430	WC-U8	H-4-8	H-12-4	HT-408
			HU-408-90	HU-490	H-11-490				
	12	⅞—14	HU-412-30	HU-430	H-11-430	WC-U12	H-4-12		HT-412
			HU-412-90	HU-490	H-11-490				
1¼	8	1—14	HU-508-30	HU-530	H-11-530	WC-U8	H-4-8	H-12-5	HT-508
			HU-508-90	HU-590	H-11-590				
	12	1—14	HU-512-30	HU-530	H-11-530	WC-U12	H-4-12		HT-512
			HU-512-90	HU-590	H-11-590				
1½	8	1—14	HU-608-30	HU-530	H-11-530	WC-U8	H-4-8		HT-608
			HU-608-90	HU-590	H-11-590				
	12	1—14	HU-612-30	HU-530	H-11-530	WC-U12	H-4-12		HT-612
			HU-612-90	HU-590	H-11-590				

ALL BARRELS ¾ DIA. CLASS II COPPER

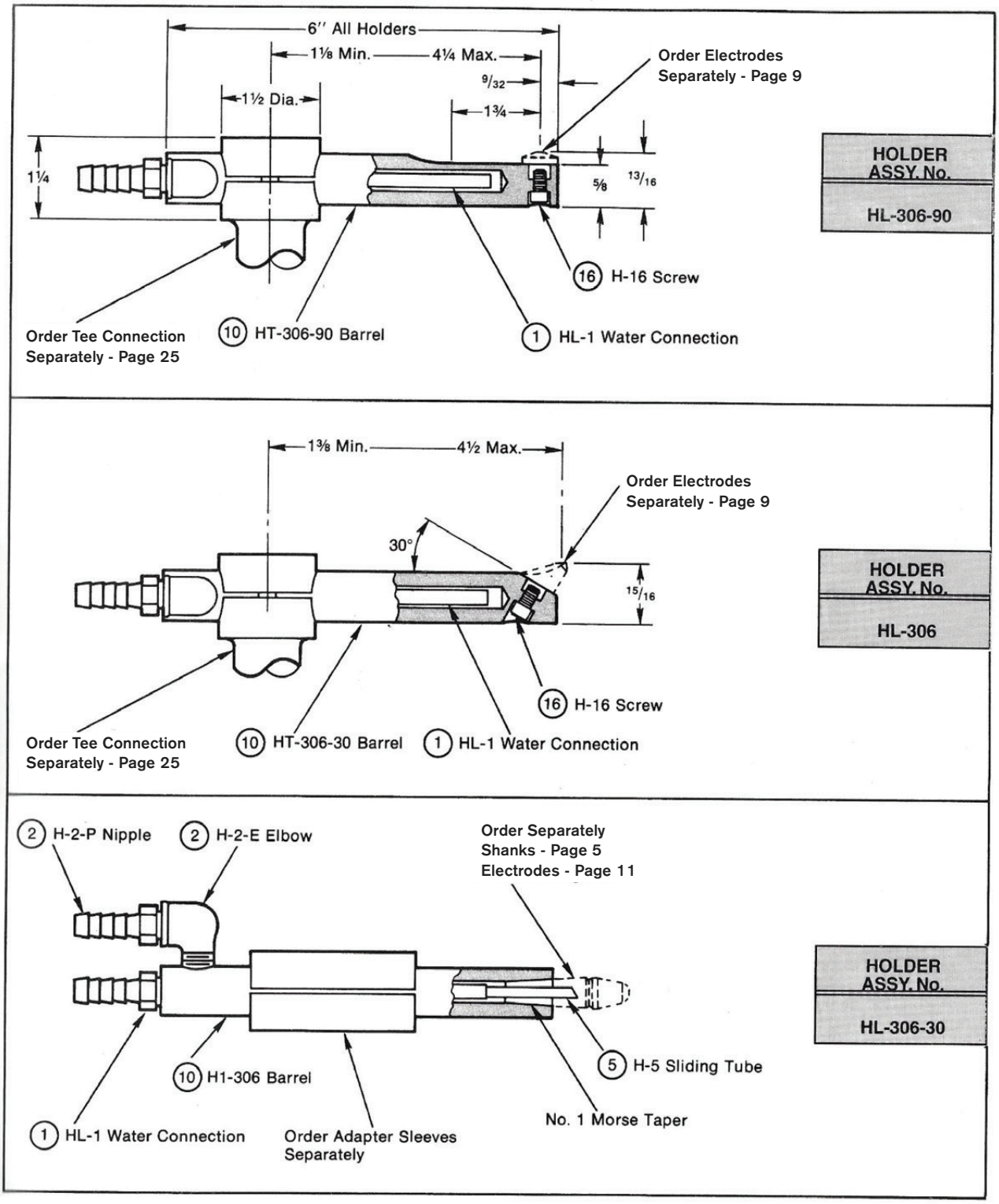

PACIFIC

TEE CONNECTIONS

R.W.M.A. CLASS II COPPER

LIGHT DUTY

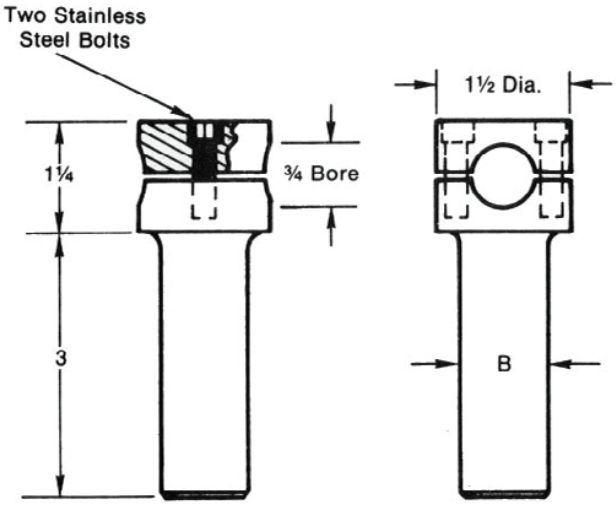

PART No.	B DIA.
T-33	¾
T-34	1
T-35	1¼

REGULAR AND HEAVY DUTY

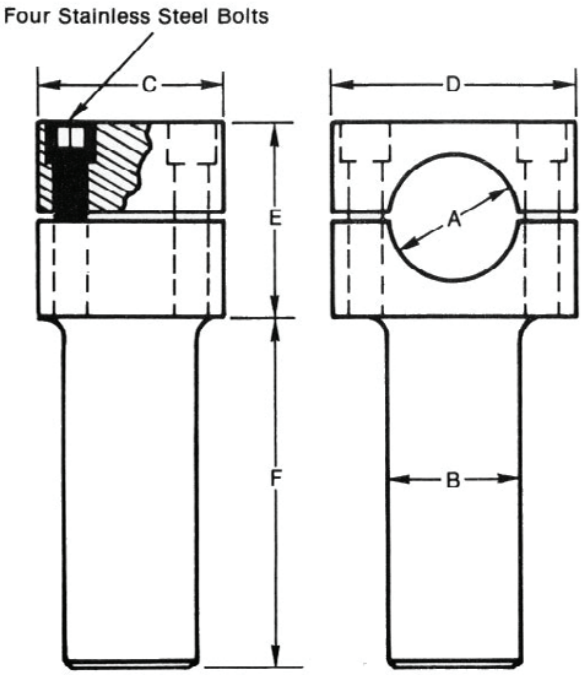

PART No.	A HOLE DIA.	B SHANK DIA.	C	D	E	F
T-44	1	1	1¾	2½	1¾	3¼
T-45	1	1¼				
T-46	1	1½				
T-54	1¼	1				
T-55	1¼	1¼				
T-56	1¼	1½				
T-65	1½	1¼			2⅛	
T-66	1½	1½				

WSI WELD SYSTEMS INTEGRATORS, INC.

844-WSI-WELD [974-9353]

www.WSIWeld.com · sales@wsiweld.com

PACIFIC

THREADED MORSE TAPER ADAPTERS

FOR ALL THREADED HOLDERS AND HEADS

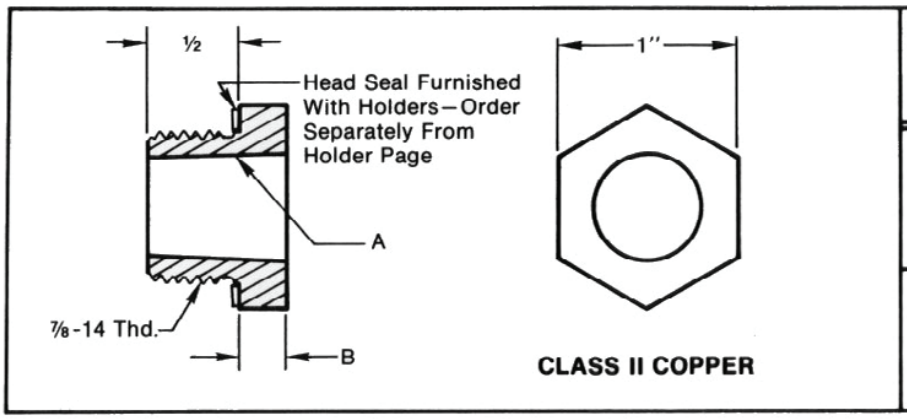

A	B	PART No.
No. 1 M.T.	3/16	1-A-1
No. 2 M.T.	5/16	1-A-2

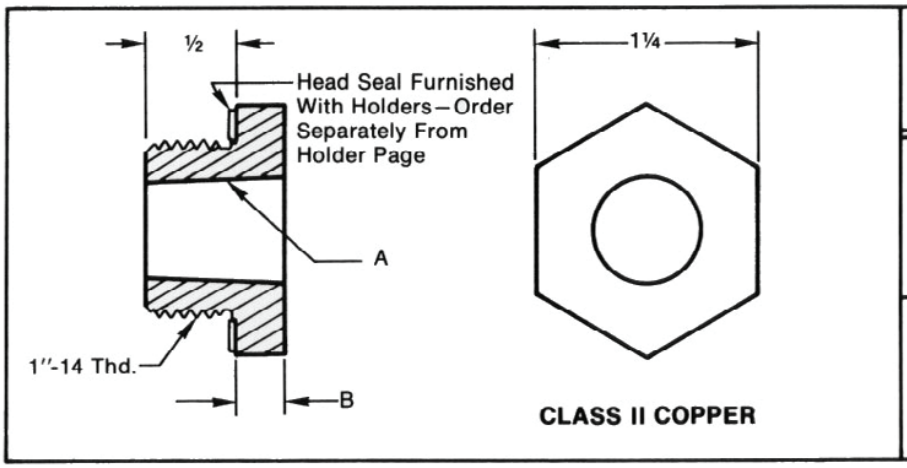

A	B	PART No.
No. 1 M.T.	3/16	2-A-1
No. 2 M.T.	5/16	2-A-2

SLEEVE ADAPTERS

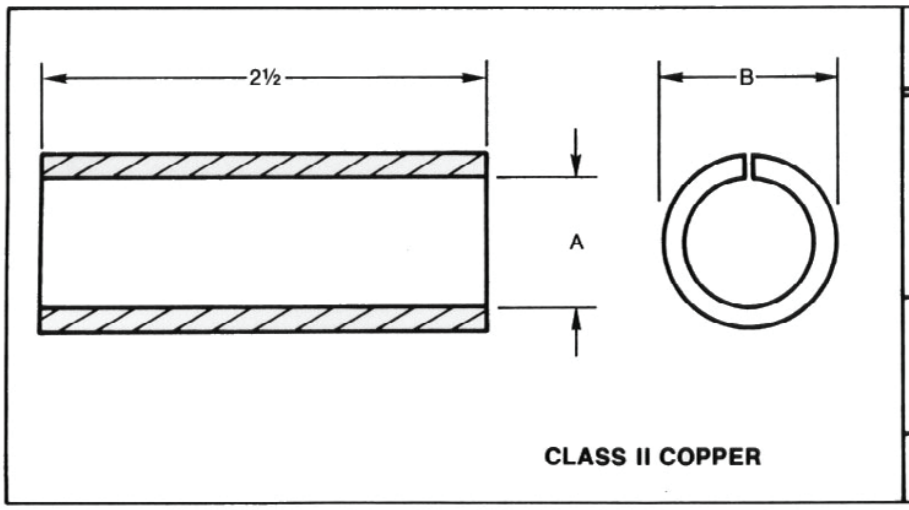

A	B	PART No.
¾	1	3-S-4
	1¼	3-S-5
	1½	3-S-6
1	1¼	4-S-5
	1½	4-S-6
1¼	1½	5-S-6

WSI WELD SYSTEMS INTEGRATORS, INC.

844-WSI-WELD [974-9353]

www.WSIWeld.com · sales@wsiweld.com

Diverse inventory with immediate shipping and unmatched customer service

Weld Systems Integrators (WSI) specializes in high-quality spot and projection resistance welders with single-phase AC and CD, and three-phase DC and MFDC power supplies. Our standard and custom welders include:

- Rocker Arm Spot Welders
- Capacitor Discharge Welder
- Seam Welders
- XY Welders
- Press Type Welders
- Bench Welders
- Door Welders
- Turntable Welders
- Manual, Partial, or Fully-Automated Multi-Gun Weld Automation

We work with trusted partners to stock a diverse inventory of consumables, spare parts and accessories. This includes electrodes, portable spot welding guns, controls, chillers, transformers and more. And we support our equipment with excellent customer service, training, welding lab testing and contract engineering.

TECNADirect.com, a division of WSI, is a stocking master distributor of TECNA welders, tool balancers and accessories. Along with BALANCERSDirect.com, our dedicated to balancers website, we maintain an IN-STOCK inventory at our Warrensville Heights, OHIO location.

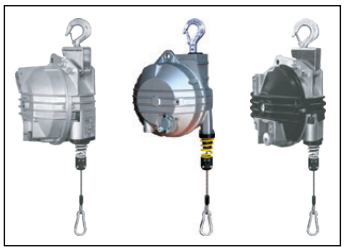

Contact your WSI Representative TODAY!

WSI WELD SYSTEMS INTEGRATORS, INC.

RESISTANCE WELDING. SOLVED.

844-WSI-WELD

www.WSIWeld.com · sales@wsiweld.com

DISTRIBUTED BY:

4943 Driscoll Road · Warrensville Heights, OH 44146 USA

Main: 844-44-TECNA · International: +1-216-475-5629

Spot | Projection | Seam | Butt | Capacitor Discharge
Resistance / MIG / TIG / Plasma Automation & Robotics
Consumables | Accessories | Engineering | Service

AWS · RWMA MEMBER · AWS WEMCO An Association of Welding Manufacturers

30044-E-00-20-10